VERSA STEEL
Approval Drawings

HATCH ASSEMBLY-GAS SPRING, 30 X 48

Assembly No.:VSH-150-A-30-48-S-GS

ASSEMBLY NO./PART NUMBER KEY:

VSH= VERSA STEEL INC. HATCH
150 = 200 P.S.F. RATED
A= ALUMINUM CONSTRUCTION
30-30= SIZE INTERIOR OPENING
S = SMALL SERIES
GS= GAS SPRING
NS= NO SPRING ASSIST

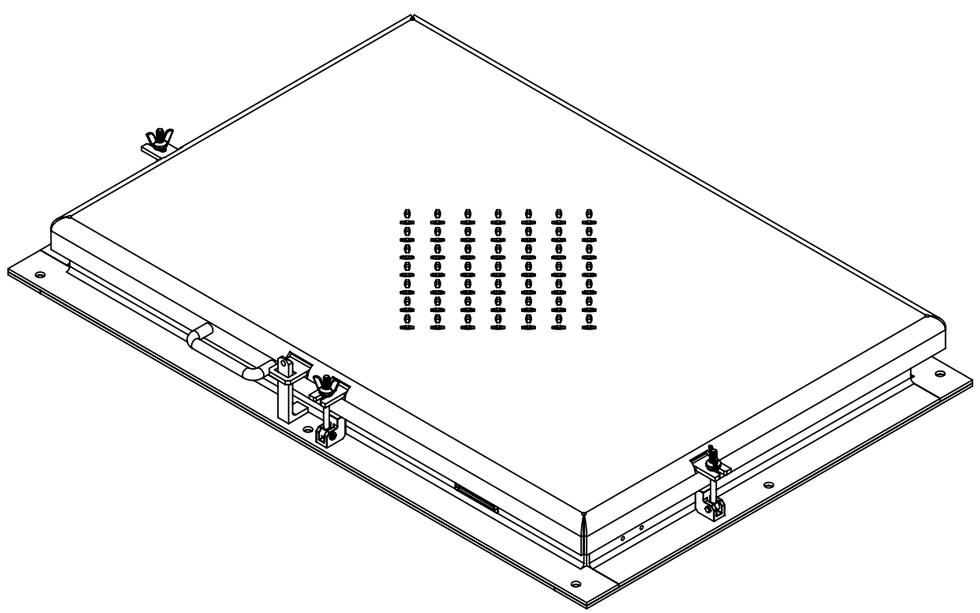

GENERAL SPECIFICATIONS:

1. UNIT IS WEATHER PROOF WITH CONTINOUS BULB SEAL ON LID TO FRAME AND 1/4" X 3" WIDE FRAME TO CURB SEALS.
2. LID OVER LAPS FRAME A MINIMUM OF 2 INCHES.
3. FRAME IS A MINIMUM OF 4" ABOVE THE CURB.
4. LID IS HINGED ON SIDE WITH TAMPER PROOF SCREWS . THERE ARE A MINIMUM OF THREE SWING BOLT HOLD DOWNS TO SECURE THE HATCH FOR WEATHER PROOF SEAL.
5. HATCH IS DESIGNED FOR 150 P.S.F. LOAD.
6. THERE ARE 8 EXTERIOR ATTACHMENT POINTS FOR 1/2" FASTENER. THERE IS A FULL FACE GASKET OF 3" WIDE CLOSED CELL FOAM EPDM BETWEEN FRAME AND CURB.
7. LID IS A 1/4" 5086 FORMED ALUMINUM TREAD PLATE.
8. ALL FASTENERS AND HARDWARE ARE 316 STAINLESS STEEL.
9. ONE COAT OF BLACK BITUMINOUS PAINT ON THE INSIDE OF FRAME WHERE IT CONTACTS CURBING CONCRETE.

THIS DOCUMENT CONTAINS PROPRIETARY, TRADE SECRET INFORMATION THAT IS THE PROPERTY OF VERSA STEEL, INC. THE INFORMATION CONTAINED IN THIS DOCUMENT, INCLUDING THE PRINCIPLE OF DESIGN, MAY NOT BE USED OR COPIED, IN WHOLE OR IN PART, WITHOUT THE EXPRESS PRIOR WRITTEN CONSENT OF VERSA STEEL, INC.

REV	ISSUED FOR	DATE	BY
A			
B			
C			
D			
E			
F			
G			

VERSA STEEL, INC.
1618 NE FIRST AVENUE
PORTLAND, OREGON 97232
(503)287-9822
FAX (503)-287-7483

DRAWN BY: E.BAILIFF
DATE: 2009-08-05
CHECKED BY:
APPROVED BY:

MATERIAL: 6061-T6 ALUMINUM
FINISH: BARE
SHEET TITLE: HATCH ASSEMBLY-GAS SPRING, 30 X 48
PART NUMBER: VSH-150-A-30-48-S-GS

PART NUMBER: VSH-150-A-30-48-S-GS
SUPPLIER: FABRICATED PART
SCALE: 1:10
DRAWING NO.: VSH-150-A-30-48-S-GS-SPEC
REVISION NO.: A
SHEET NO.: 1 OF 2

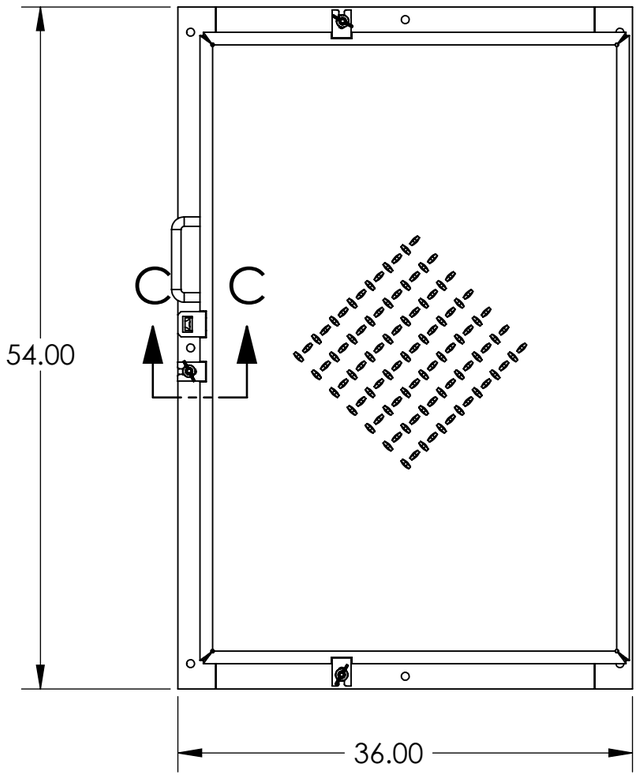

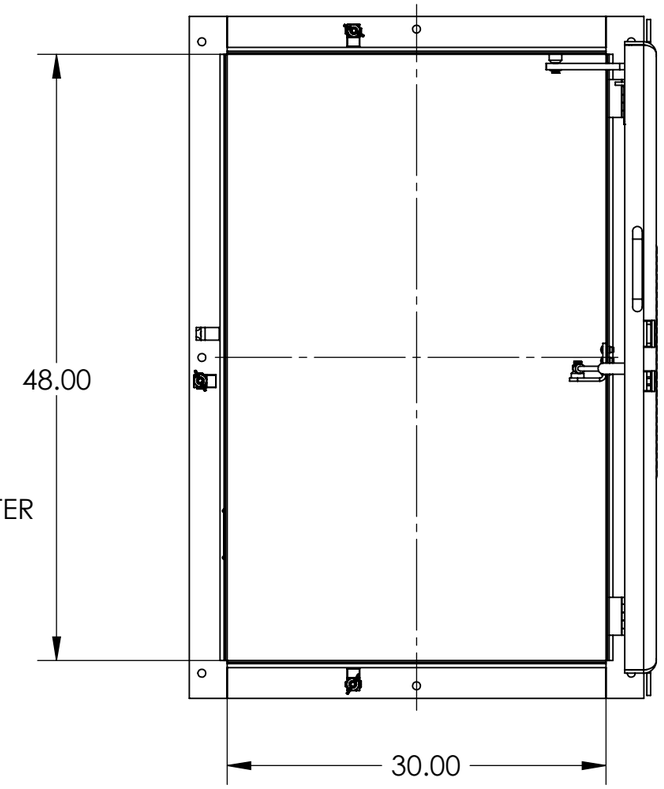

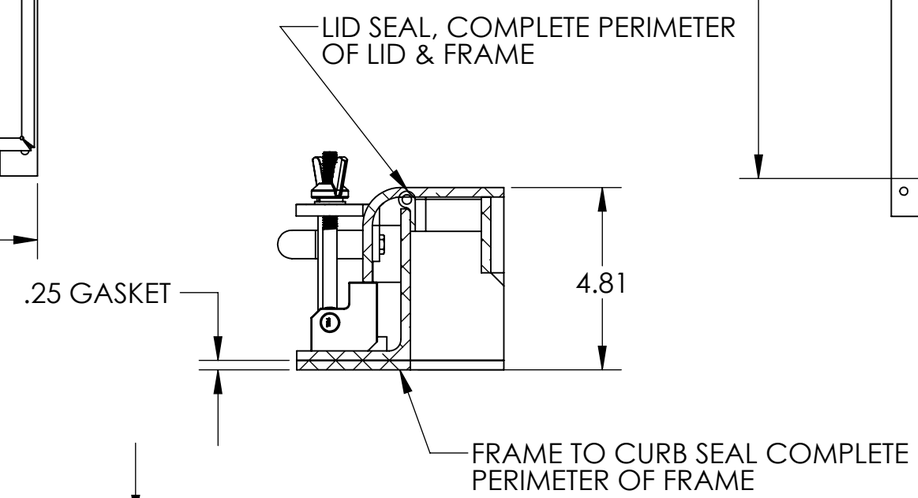

SECTION C-C
SCALE 1 : 4

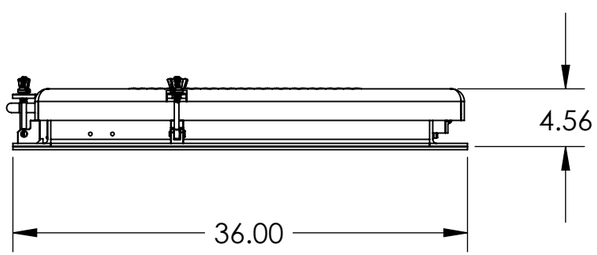

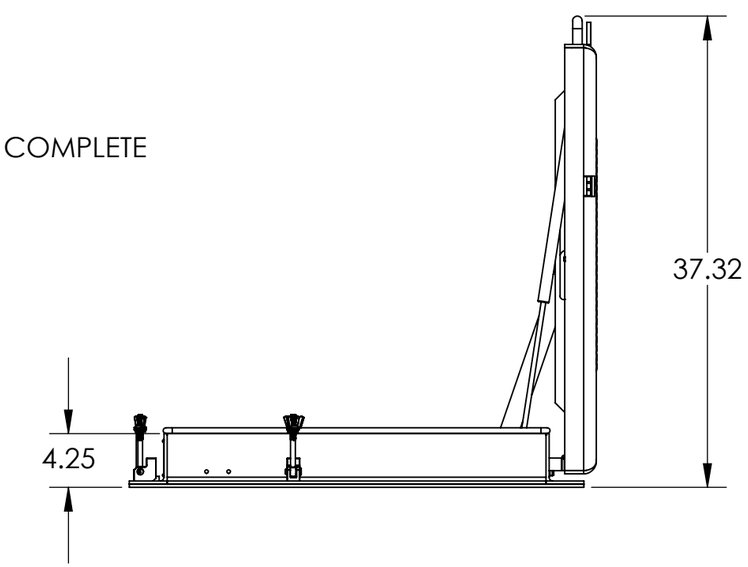

NOTES:
PN: VSH-150-A-30-48-S-GS
DESC: HATCH ASSEMBLY-GAS SPRING, 30 X 48
MATRL: 6061-T6 ALUMINUM
EST. WT: 103.2
FINISH: BARE
NOTE: -
CAD FILE: VSH-150-A-30-48-S-GS-SPEC

THIS DOCUMENT CONTAINS PROPRIETARY, TRADE SECRET INFORMATION THAT IS THE PROPERTY OF VERSA STEEL, INC. THE INFORMATION CONTAINED IN THIS DOCUMENT, INCLUDING THE PRINCIPLE OF DESIGN, MAY NOT BE USED OR COPIED, IN WHOLE OR IN PART, WITHOUT THE EXPRESS PRIOR WRITTEN CONSENT OF VERSA STEEL, INC.

REV	ISSUED FOR	DATE	BY
G			
F			
E			
D			
C			
B			
A			

VERSA STEEL, INC.
1618 NE FIRST AVENUE
PORTLAND, OREGON 97232
(503)287-9822
FAX (503)-287-7483

DRAWN BY: E.BAILIFF
DATE: 2009-08-05
CHECKED BY:
APPROVED BY:

MATERIAL: 6061-T6 ALUMINUM
FINISH: BARE
SHEET TITLE: HATCH ASSEMBLY-GAS SPRING, 30 X 48
PART NUMBER: VSH-150-A-30-48-S-GS

PART NUMBER: VSH-150-A-30-48-S-GS
SUPPLIER: FABRICATED PART
SCALE: 1:12
DRAWING NO.: VSH-150-A-30-48-S-GS-SPEC
REVISION NO.: A
SHEET NO.: 2 OF 2