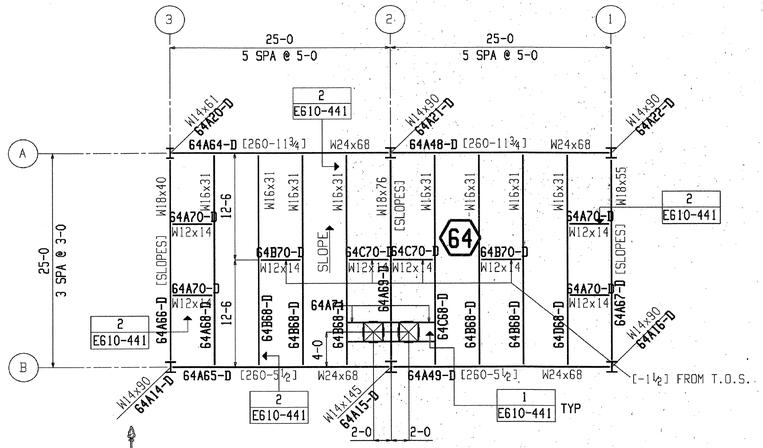

PENTHOUSE ROOF FRAMING PLAN

Elevation: AS NOTED

FIELD WARNING:
LIFT HOLE IS FOR SINGLE PIECE DEAD LOAD LIFT & NOT TO BE USED FOR MULTI-PIECE ASSEMBLY. LIFTING OF MULTI-PIECE ASSEMBLIES SHALL BE THE RESPONSIBILITY OF THE ERECTOR & ALL LIFTING DEVICES & LIFTING LOCATIONS SHALL BE DESIGNED BY THE ERECTOR.

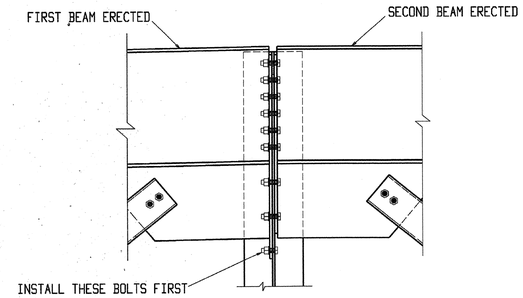

TYP ERECTION DETAIL
@ COMMON BRACED BEAMS
TO COL. WEB @ ROOF.

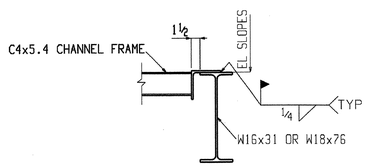

1 E610-441 SECTION
REF: SEC H/691

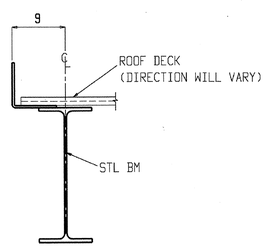

2 E610-441 SECTION
REF: SEC H/692

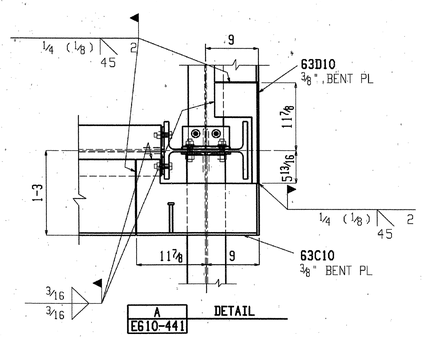

A E610-441 DETAIL

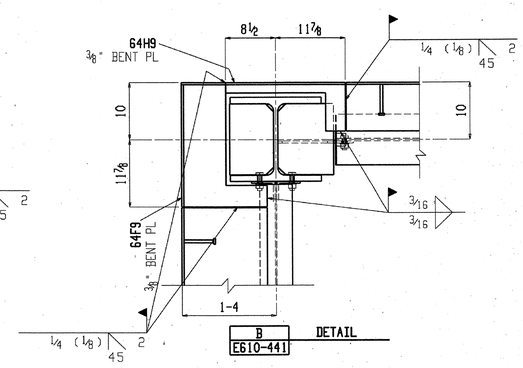

B E610-441 DETAIL

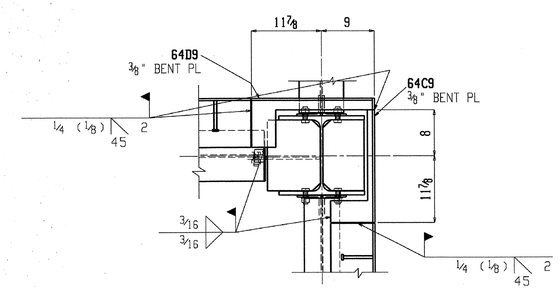

C E610-441 DETAIL

REV. NO.	DATE	REVISION DESCRIPTION	BY/CHK	APP'L	SHOP	FIELD	REV. NO.	DATE	REVISION DESCRIPTION	BY/CHK	APP'L	SHOP	FIELD
0							0				JAN 14 2004		

DESIGN DWG REF: PWC610-S1-001-441
DRAWN GVD DATE 12-9-03
CHKD MEI DATE 12-03
STRUCTURE UNSTABLE UNTIL FIELD WORK COMPLETE. ERECTOR GUY AS REQUIRED.
PAINT PIECE MARK TO READ RIGHT SIDE UP ON LEFT END OF PIECE. ERECT WITH MARK AT SAME END AS SHOWN ON ERECTION PLAN & RIGHT SIDE UP.

AFCO STEEL
1423 EAST SIXTH STREET / POST OFFICE BOX 231 / AREA CODE 501-340-6200 / LITTLE ROCK, ARKANSAS 72203

CUSTOMER SUITT
JOB TITLE LILLY PWC
STRUCTURE CUP BUILDING 610
LOCATION MANASSAS, VA
ARCH. OR ENGR. JACOBS ENGINEERING

DRAWING NO. E610-441
CONTRACT NO. 3227

Jan 12 2004 02:46:46 PM